OWNER INFORMATION

LOCHMERE MEADOWS AFFORDABLE H

658 UNION AVENUE

LACONIA, NH 03246

SALES HISTORY

Date	Book	Page	Type	Price	Grantor

PICTURE

LISTING HISTORY

03/20/13	DMPR
04/01/11	LMSL
03/10/11	JBPM

NOTES

GREEN,LAUNDRY ROOM ON END=14X24, HEAT & HW INCL,
FLRS=ASPHALT TILE, 2BR, 1BA UNITS; 3/13 SOLAR PANELS INSTALLED;

EXTRA FEATURES VALUATION

Feature Type	Units	Lngth x Width	Size Adj	Rate	Cond	Market Value	Notes

MUNICIPAL SOFTWARE BY AVITAR

TILTON, NH ASSESSING OFFICE

PARCEL TOTAL TAXABLE VALUE

Year	Building	Features	Land
2016	$ 512,400	$ 0	$ 0 (c)

Parcel Total: $ 1,219,400

(Card Total: $ 512,400)

LAND VALUATION

Zone: **Minimum Acreage:** **Minimum Frontage:** **Site:** **Driveway:** **Road:**

Land Type COM/IND **Neighborhood:**

Cond	Ad Valorem	SPI	R	Tax Value	Notes

0 ac

PICTURE

OWNER

LOCHMERE MEADOWS AFFORDABL

658 UNION AVENUE

LACONIA, NH 03246

TAXABLE DISTRICTS

District	Percentage
FIRE DISTRICT	% 100
LOCHMERE VIL	% 100

PERMITS

Date	Permit ID	Permit Type	Notes

BUILDING DETAILS

Model: **2.00 STORY APARTMENTS**
Roof: **GABLE OR HIP/ASPHALT**
Ext: **VINYL SIDING**
Int: **DRYWALL**
Floor: **HARD TILE**
Heat: **GAS/HOT WATER**
Bedrooms: **14** Baths: **7.0** Fixtures:
Extra Kitchens: Fireplaces:
A/C: **No** Generators:
Quality: **A2 AVG+20**
Com. Wall: **WOOD, 12 FT.** **0.9000**
Size Adj: **0.8654** Base Rate: **CAP 70.00**
Bldg. Rate: **1.0368**
Sq. Foot Cost: **$ 65.32**

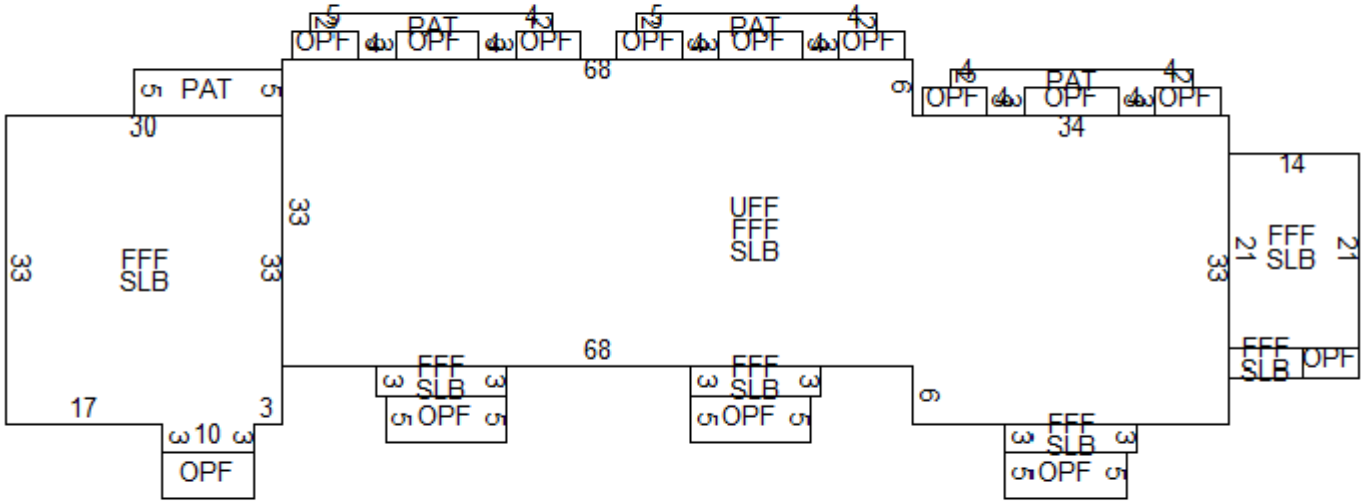

BUILDING SUB AREA DETAILS

ID	Description	Area	Adj.	Effect.
FFF	FST FLR FIN	4830	1.00	4830
SLB	SLAB	4830	0.00	0
UFF	UPPER FLR FIN	3366	1.00	3366
OPF	OPEN	473	0.25	118
PAT	PATIO	308	0.10	31
GLA:	**8,196**	**13,807**		**8,345**

2014 BASE YEAR BUILDING VALUATION

Market Cost New: **$ 545,095**
Year Built: **2010**
Condition For Age: AVERAGE **6 %**
Physical:
Functional:
Economic:
Temporary:
Total Depreciation: **6 %**

Building Value: **$ 512,400**