OWNER INFORMATION

LOCHMERE MEADOWS AFFORDABLE H

658 UNION AVENUE

LACONIA, NH 03246

SALES HISTORY

Date	Book	Page	Type	Price	Grantor

PICTURE

LISTING HISTORY

03/20/13	DMPR
03/10/11	JBPM

NOTES

GREY; EA UNIT 2BR,1BA, HEAT & HW INCL, FLRS=ASPH TILE14X24
LAUNDRY/UTILS; 3/13 SOLAR PANELS INSTALLED

EXTRA FEATURES VALUATION

Feature Type	Units	Lngth x Width	Size Adj	Rate	Cond	Market Value	Notes
SHED-WOOD	144	12 x 12	171	7.00	125	2,155	FNDTN
LEAN-TO	36	3 x 12	400	4.00	100	576	ATT 12X12
						2,700	

MUNICIPAL SOFTWARE BY AVITAR

TILTON, NH ASSESSING OFFICE

PARCEL TOTAL TAXABLE VALUE

Year	Building	Features	Land
2016	**$ 512,400**	**$ 2,700**	**$ 0 (c)**

Parcel Total: $ 1,219,400

(Card Total: $ 515,100)

LAND VALUATION

Zone: **Minimum Acreage:** **Minimum Frontage:** **Site:** **Driveway:** **Road:**

Land Type COM/IND **Neighborhood:** **Cond** **Ad Valorem** **SPI** **R** **Tax Value** **Notes**

0 ac

PICTURE

OWNER

LOCHMERE MEADOWS AFFORDABL

658 UNION AVENUE

LACONIA, NH 03246

TAXABLE DISTRICTS

District	Percentage
FIRE DISTRICT	% 100
LOCHMERE VIL	% 100

PERMITS

Date	Permit ID	Permit Type	Notes

BUILDING DETAILS

Model: **2.00 STORY APARTMENTS**
Roof: **GABLE OR HIP/ASPHALT**
Ext: **VINYL SIDING**
Int: **DRYWALL**
Floor: **HARD TILE**
Heat: **GAS/HOT WATER**
Bedrooms: **14** Baths: **7.0** Fixtures:
Extra Kitchens: Fireplaces:
A/C: **No** Generators:
Quality: **A2 AVG+20**
Com. Wall: **WOOD, 12 FT.** **0.9000**
Size Adj: **0.8654** Base Rate: **CAP 70.00**
Bldg. Rate: **1.0368**
Sq. Foot Cost: **$ 65.32**

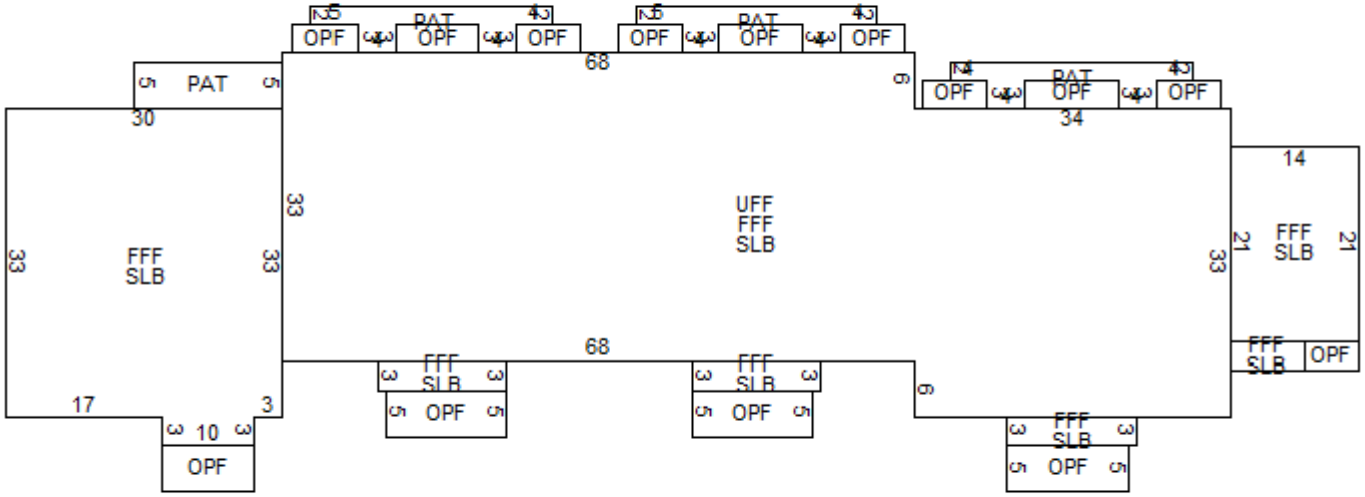

BUILDING SUB AREA DETAILS

ID	Description	Area	Adj.	Effect.
FFF	FST FLR FIN	4830	1.00	4830
UFF	UPPER FLR FIN	3366	1.00	3366
OPF	OPEN	473	0.25	118
PAT	PATIO	308	0.10	31
SLB	SLAB	4830	0.00	0
GLA:	**8,196**	**13,807**		**8,345**

2014 BASE YEAR BUILDING VALUATION

Market Cost New: **$ 545,095**
Year Built: **2010**
Condition For Age: AVERAGE **6 %**
Physical:
Functional:
Economic:
Temporary:
Total Depreciation: **6 %**

Building Value: **$ 512,400**