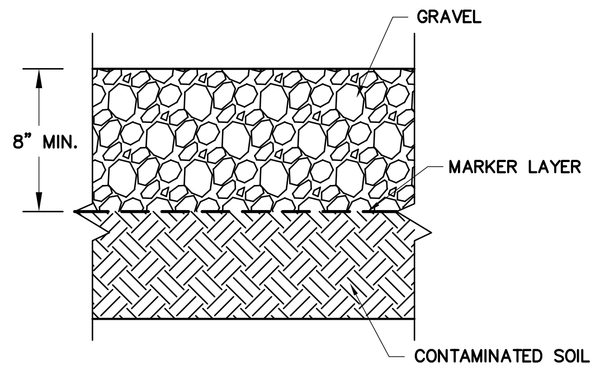

GRAVEL PARKING AREA
COVER SYSTEM

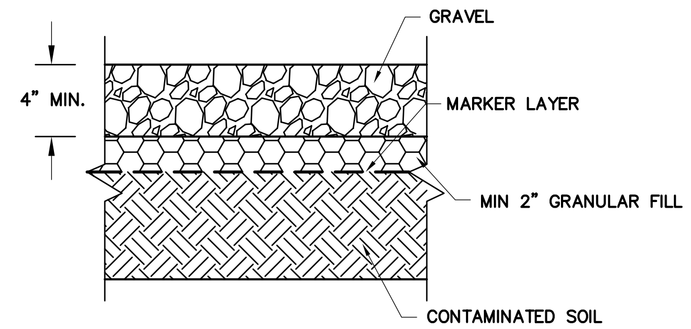

GRAVEL PATH COVER
SYSTEM

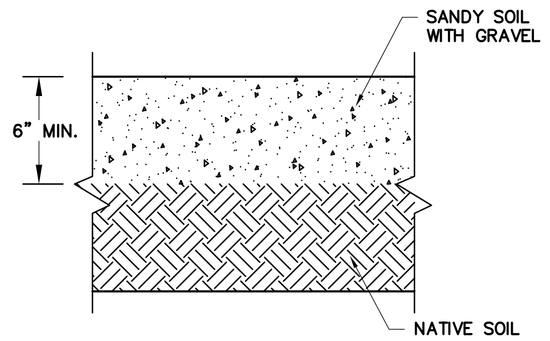

TURTLE NESTING AREA
COVER SYSTEM

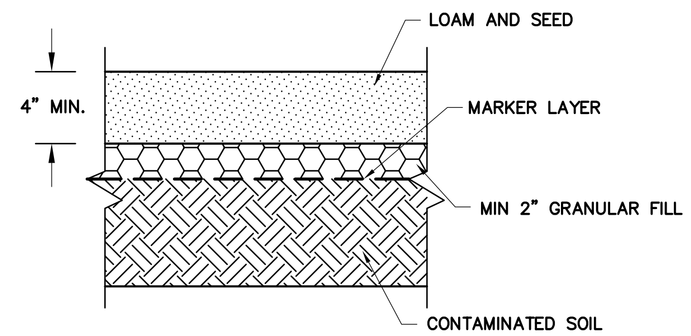

LOAM AND SEED COVER
SYSTEM

NOTES

1. SEED MIX TO BE TYPE 45 SLOPE SEED IN ACCORDANCE WITH NHDOT SPECIFICATION 644 – GRASS SEED.

SITE COVER SYSTEMS

N.T.S.

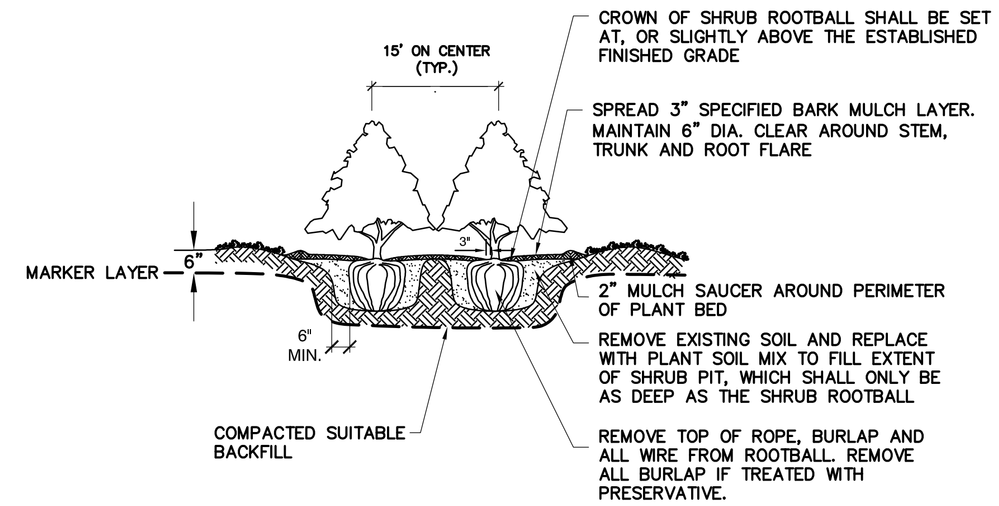

SHRUB SCHEDULE: (18) LOW GROWTH SHRUB TO BE SPECIFIED BY THE TOWN OF TILTON. SEE SHEET C–2 FOR LOCATIONS.

NOTES

1. THERE IS NO SPECIFICATION FOR SEPARATION BETWEEN THE SHRUB ROOT BALL AND THE MARKER LAYER.

SHRUB PLANTING

N.T.S.

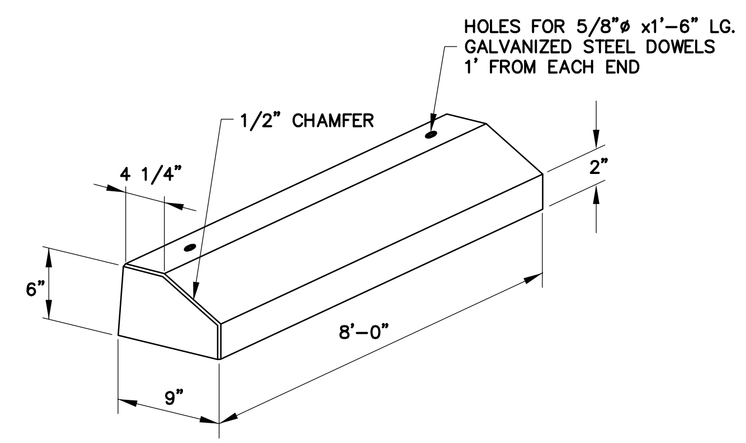

NOTES

1. MINIMUM REINFORCING 4 – #3 BARS, FULL LENGTH
2. MINIMUM WEIGHT PER FOOT – 44 LBS.
3. CURBING TO BE DOWELLED TO A DEPTH OF 18–24".
4. DOWELS TO BE RECESSED 1" AND GROUTED

PRECAST PARKING LOT CURBING (BUMPER CURB)

N.T.S.

COPYRIGHT 2013 WESTON & SAMPSON

P:\Credere\Ernies Park Design\CADD Files\C-3 Details.dwg

Weston&Sampson®
100 International Dr., S. 152, Portsmouth, NH
(603) 431-3937 (800) SAMPSON
www.westonandsampson.com

No.	Date	Dr.By	Ck.By	App.By	Description	DATE
		A	P	P	R O V E D	

REGISTERED PROFESSIONAL ENGINEER

TOWN OF TILTON, NEW HAMPSHIRE
CONSERVATION COMMISSION
ERNIE'S AUTO PARL DESIGN

DETAILS

CADD NO.	SCALE:	CONTRACT:	JOB NO.	DR.BY	DSN.BY	CHK.BY	APP.BY
DET	AS NOTED	–	2140313	SHK	SHK	RSV	RSV

C-3

FILE NO. –